NEWHAVEN DISPLAY
INTERNATIONAL

Product Specification

NHD-10.1-HDMI-A-RSXV

TFT Liquid Crystal Display

NHD-	Newhaven Display
10.1-	10.1" Diagonal
HDMI-	HDMI Interface
A-	1024x600 Resolution, HDMI Audio Support
RSXV-	Premium (MVA) Display

Newhaven Display International, Inc.
2661 Galvin Court, Elgin, IL 60124 USA

Ph: 847.844.8795 | Fx: 847.844.8796
www.newhavendisplay.com

REACH Compliant

RoHS Compliant

Table of Contents

Document Revision History 2
Mechanical Drawing 3
Schematics 4
Electrical Characteristics 8
HDMI Receiver Information 8
Audio Amplifier Information 8
Technical Resource 8
EDID Array 9
EDID Timing 9
Quality Information 10

Additional Resources

- **Support Forum:** https://support.newhavendisplay.com/hc/en-us/community/topics
- **GitHub:** https://github.com/newhavendisplay
- **Example Code:** https://support.newhavendisplay.com/hc/en-us/categories/4409527834135-Example-Code/
- **Knowledge Center:** https://www.newhavendisplay.com/knowledge_center.html
- **Quality Center:** https://www.newhavendisplay.com/quality_center.html
- **Precautions for using LCDs/LCMs:** https://www.newhavendisplay.com/specs/precautions.pdf
- **Warranty / Terms & Conditions:** https://www.newhavendisplay.com/terms.html

Document Revision History

Revision	Date	Description	Changed By
0	08/09/2021	Initial Release	ZP
1	02/02/2022	Updated Cover Page, Technical Resource Section, and Mechanical Drawing	ZP
2	12/11/2022	Mechanical Drawing Updated	KL

Mechanical Drawing

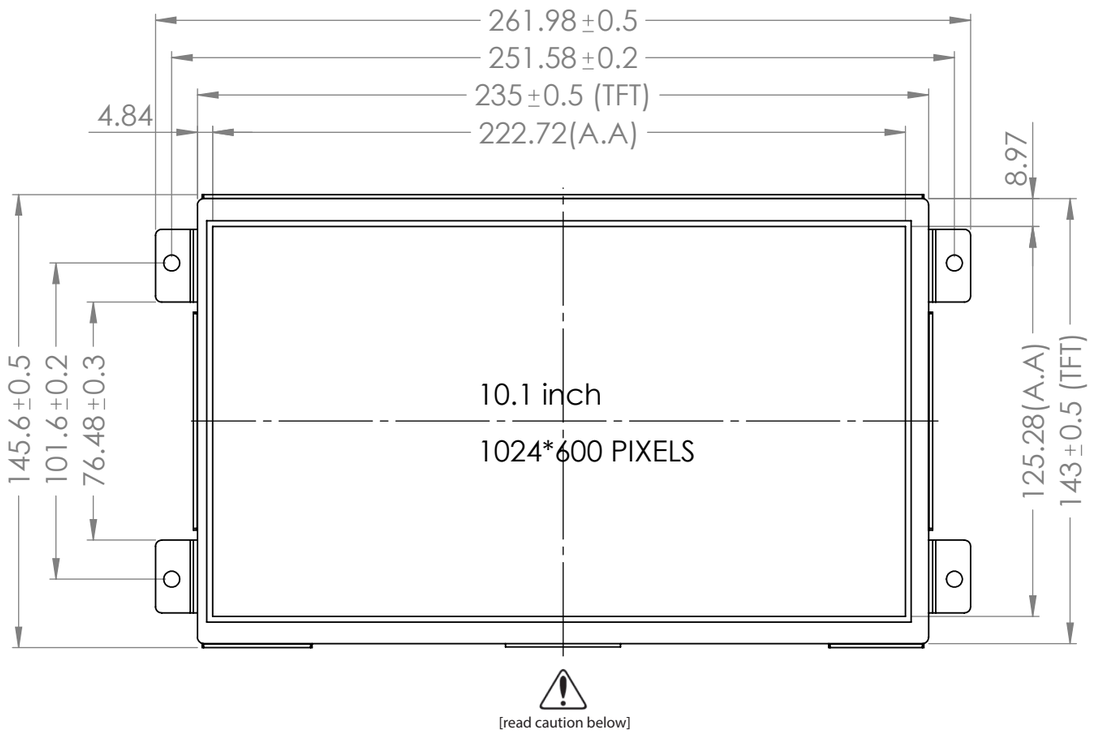

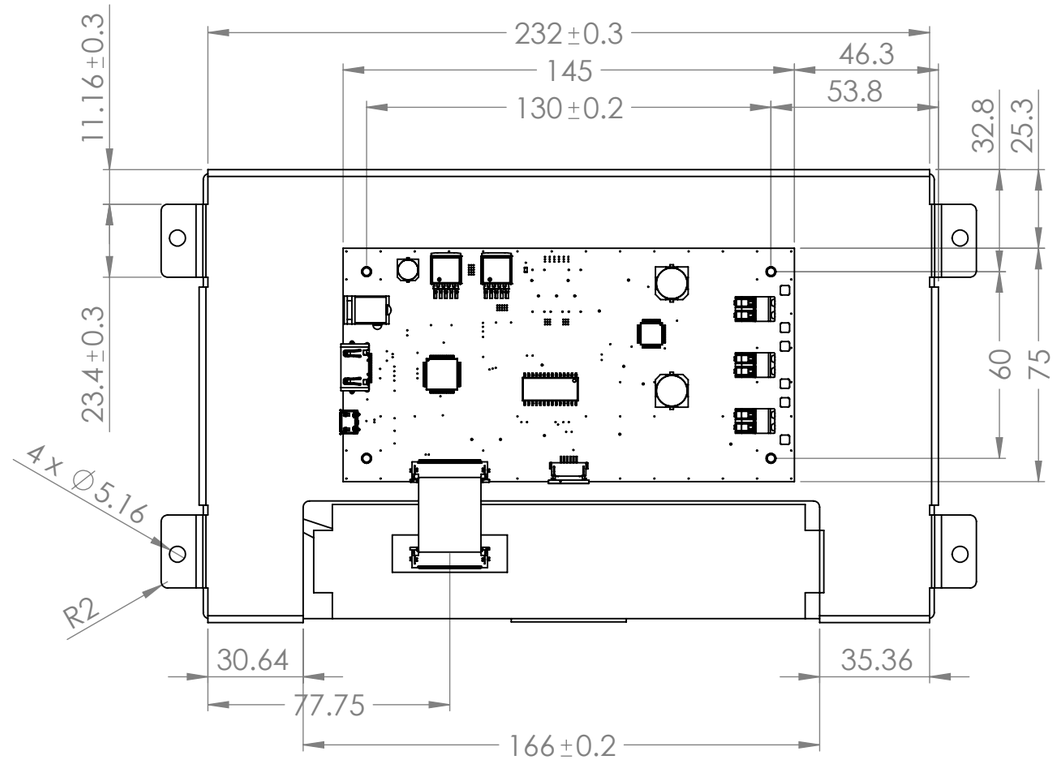

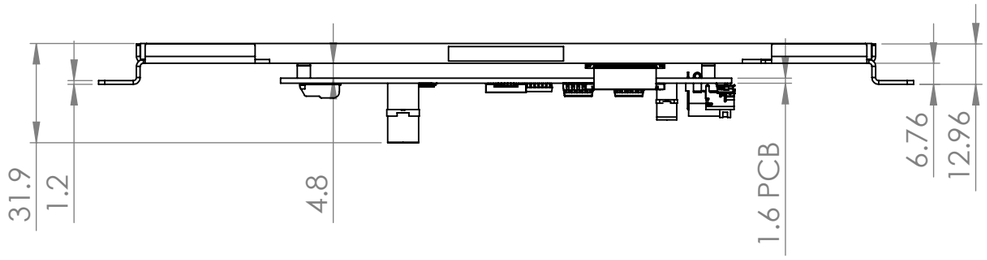

Product Description: 10.1” 1024x600 Premium HDMI TFT

1. Driver IC: ADV7611
2. Interface: HDMI
3. Power Requirement: 7.5V
4. Optical Features: Normally White, Anti-Glare, Transmissive, 800 cd/m²

Improper handling of the FPC connections at the bottom edge of this module may cause damage resulting in display or touch failure. Take special care when handling this area of the display module to make sure these connections are never strained nor creased.

Standard Tolerance: (Unless otherwise specified) Linear: ±0.3mm	NEWHAVEN DISPLAY INTERNATIONAL	
	Drawing/Part Number: NHD-10.1-HDMI-A-RSXV	Revision: -
Unless otherwise specified: • Dimensions are in Millimeters • Third Angle Projection	Drawn By: K. Lewis	Approved By: K. Lewis
	Drawn Date: 12/11/2022	Approved Date: 12/11/2022

This drawing is solely the property of Newhaven Display International, Inc. The information it contains is not to be disclosed, reproduced or copied in whole or part without written approval from Newhaven Display.

ADV7611 (Low Power 165 MHz HDMI Receiver)

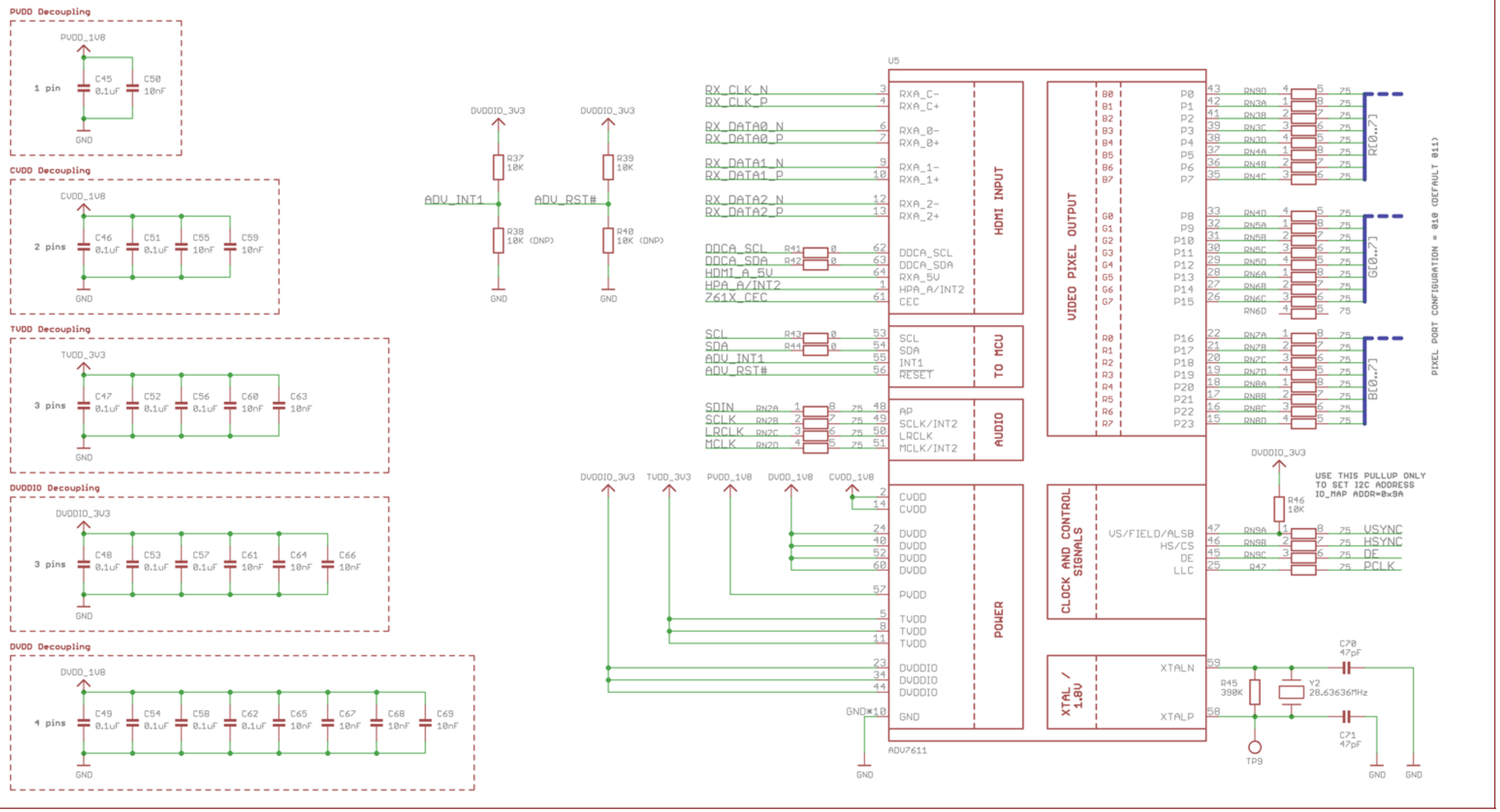

NEWHAVEN DISPLAY INTERNATIONAL

Schematic / Part Number:		Revision:
NHD-10.1-HDMI-A		1.1
Drawn By: K. Lewis	Checked By: K. Lewis	
Drawn Date: 12/09/2022	Checked Date: 12/09/2022	

This document and any associated data contain restricted information that is Newhaven Display International, Inc property. Only disclose or duplicate for others as authorized by Newhaven Display.

LCD Interface

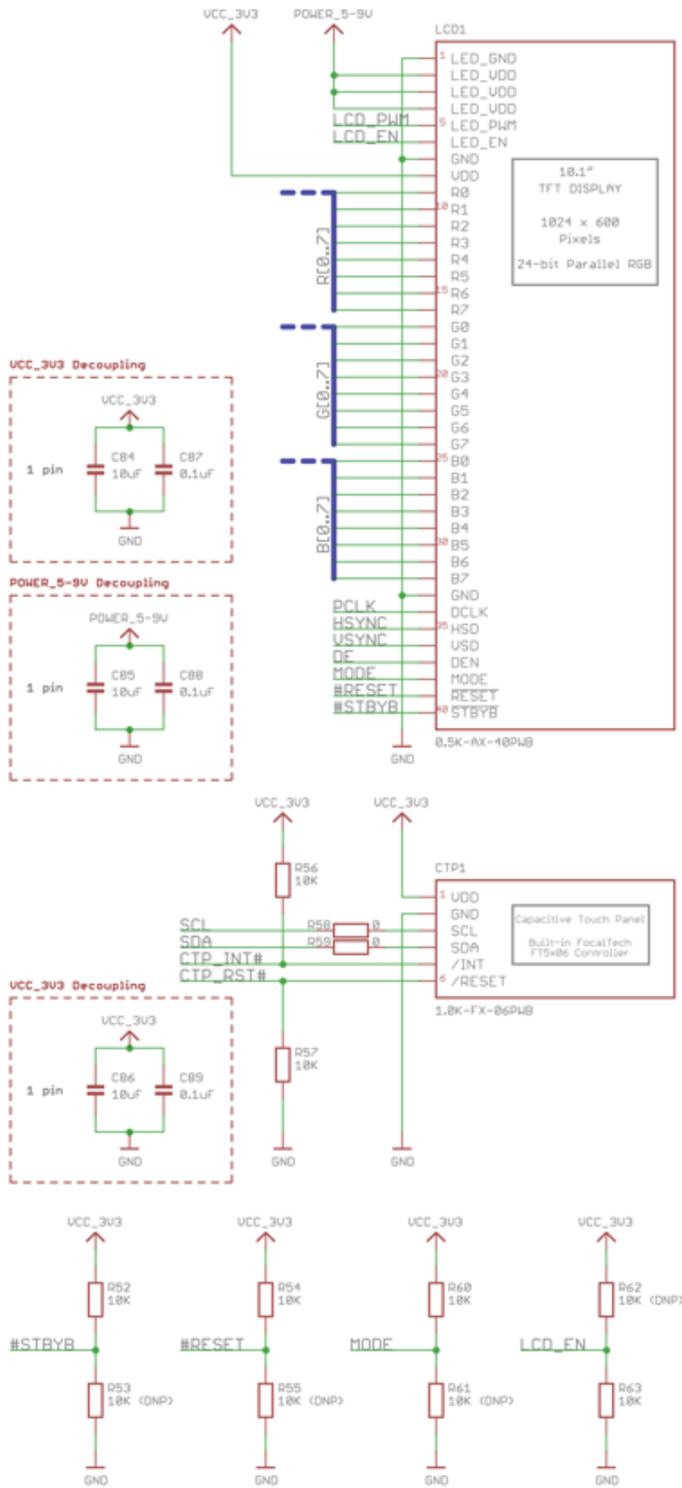

Power Supply

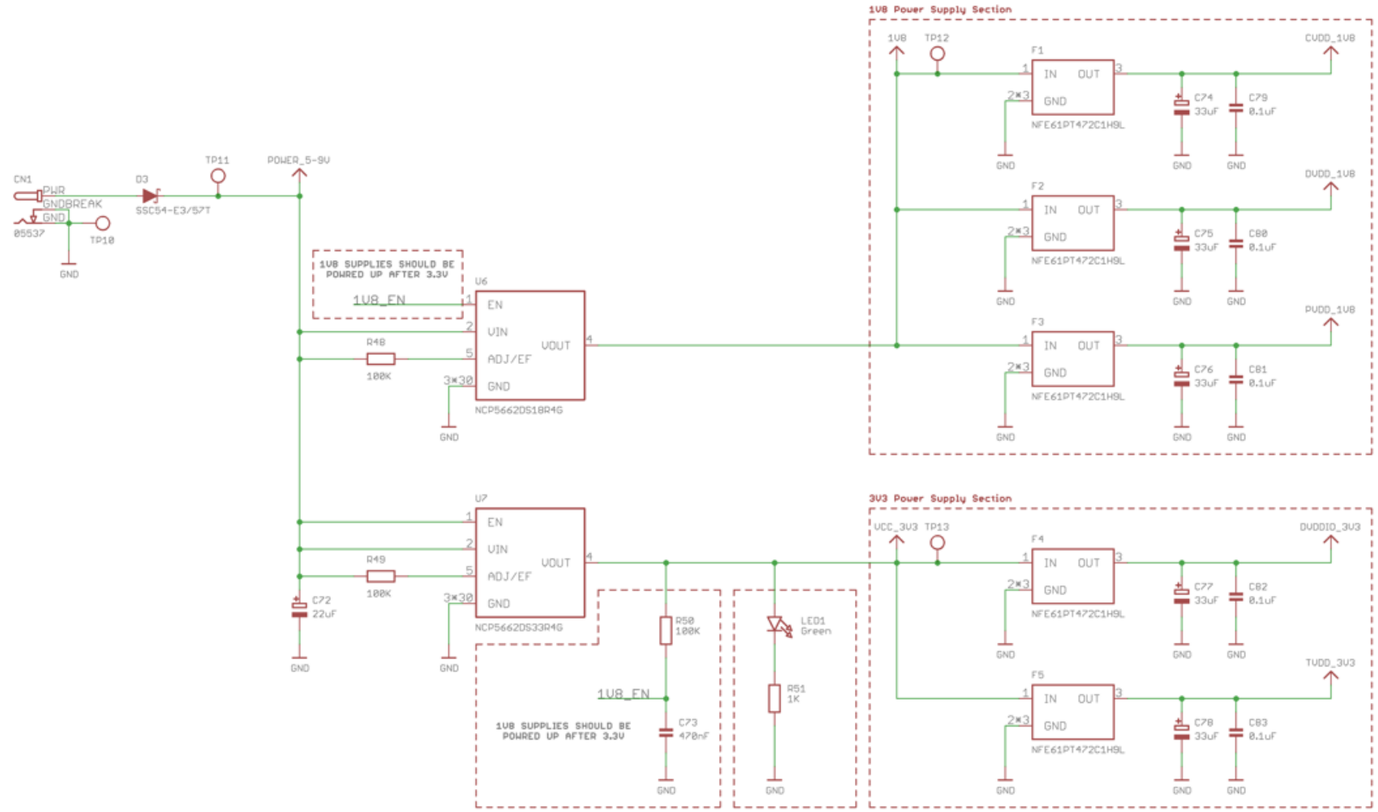

PWM LED Backlight

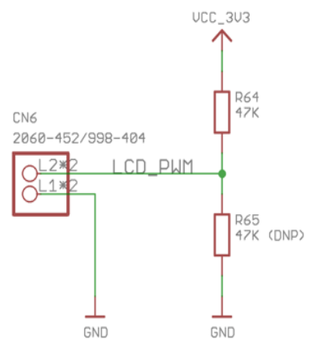

NEWHAVEN DISPLAY INTERNATIONAL

Schematic / Part Number:		Revision:
NHD-10.1-HDMI-A		1.1
Drawn By: K. Lewis	Checked By: K. Lewis	
Drawn Date: 12/09/2022	Checked Date: 12/09/2022	

This document and any associated data contain restricted information that is Newhaven Display International, Inc property. Only disclose or duplicate for others as authorized by Newhaven Display.

PIC18LF2550 / Micro-B USB Capacitive Touch Screen Controller

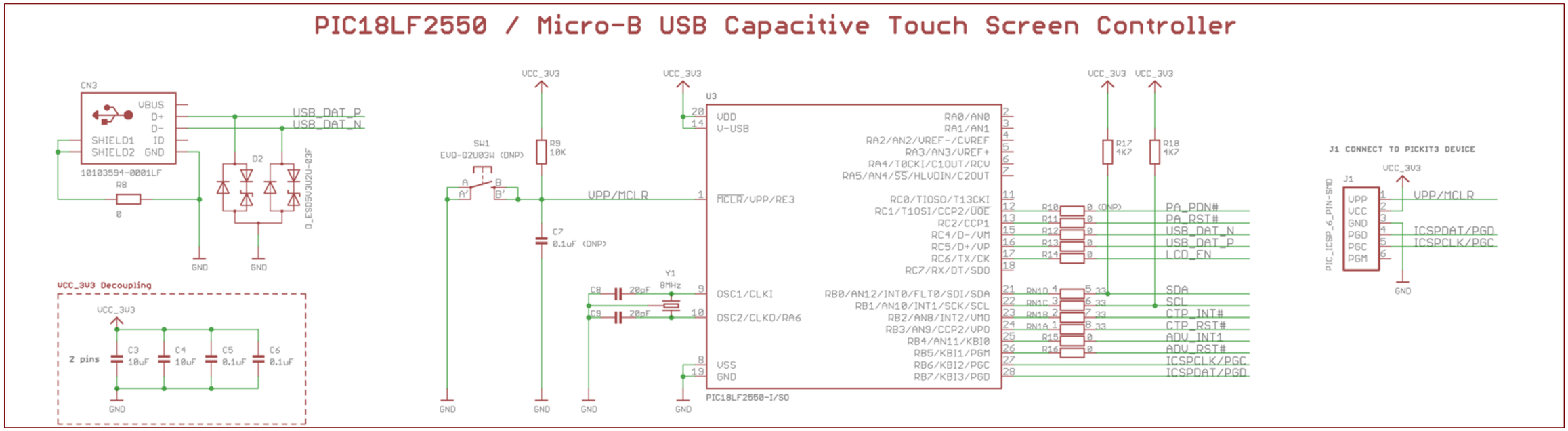

HDMI Port A - Connector and ESD Suppression

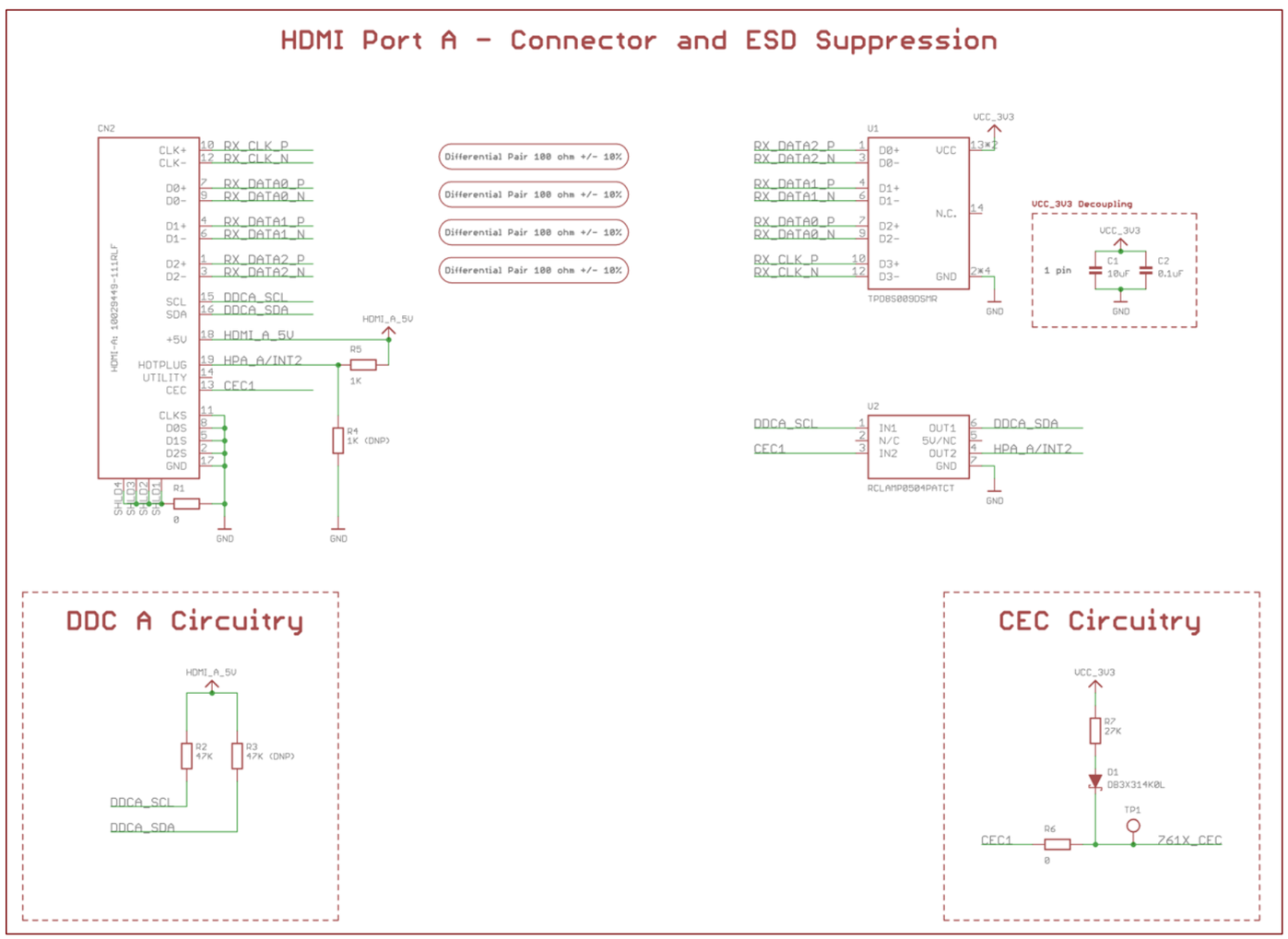

Mounting Holes 3.2mm Plated

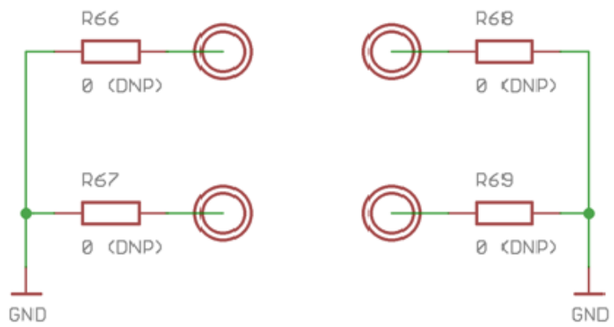

NEWHAVEN DISPLAY INTERNATIONAL

Schematic / Part Number:		Revision:
NHD-10.1-HDMI-A		1.1
Drawn By: K. Lewis	Checked By: K. Lewis	
Drawn Date: 12/09/2022	Checked Date: 12/09/2022	

This document and any associated data contain restricted information that is Newhaven Display International, Inc property. Only disclose or duplicate for others as authorized by Newhaven Display.

10-W Digital Audio Power Amplifier

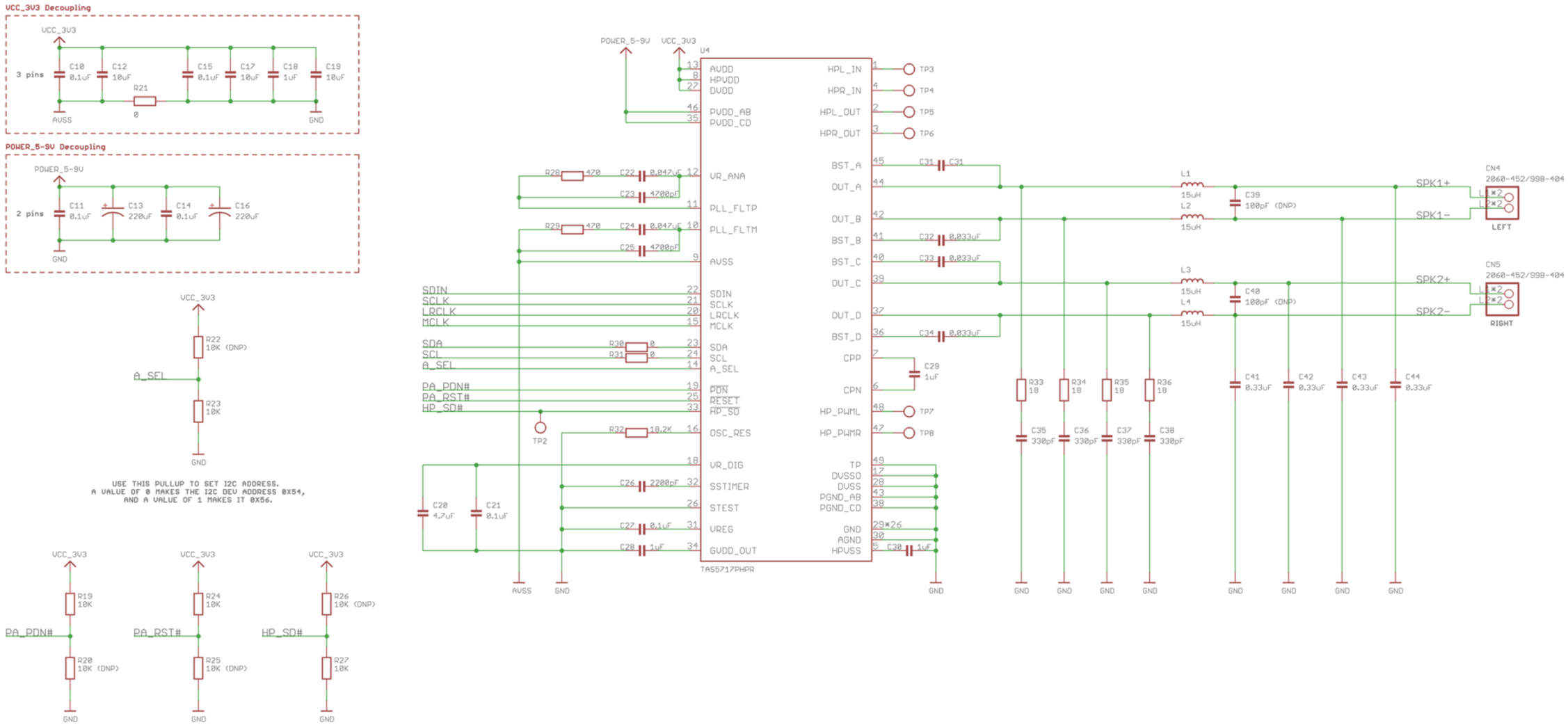

NEWHAVEN DISPLAY INTERNATIONAL

Schematic / Part Number:		Revision:
NHD-10.1-HDMI-A		1.1
Drawn By: K. Lewis	Checked By: K. Lewis	
Drawn Date: 12/09/2022	Checked Date: 12/09/2022	

This document and any associated data contain restricted information that is Newhaven Display International, Inc property. Only disclose or duplicate for others as authorized by Newhaven Display.

Electrical Characteristics

Item	Symbol	Condition	Min.	Typical	Max.	Unit
Operating Temperature Range	T_{OP}	Absolute Max	-20	-	+50	°C
Storage Temperature Range	T_{ST}	Absolute Max	-30	-	+60	°C
Backlight PWM Voltage	V_{PWM}	-	2.5	3.3	5.5	V
Backlight PWM Frequency	f_{PWM}	V_{PWM} = 3.3V	1	-	20	kHz
Module Supply Voltage	V_{DD}	-	6.0	7.5	9.0	V
Module Supply Current	I_{DD}	V_{DD} = 6V	-	1.7	1.9	A
		V_{DD} = 9V	-	1.0	1.2	A

HDMI Receiver Information

On-board Analog Devices ADV7611 Low Power HDMI Receiver.
To view the full ADV7611 specification, please download it by accessing the link below:
http://www.analog.com/media/en/technical-documentation/data-sheets/ADV7611.pdf

Audio Amplifier Information

On-board Texas Instruments TAS5717 Digital Audio Power Amplifier.
To view the full TAS5717 specification, please download it by accessing the link below:
http://www.ti.com/lit/ds/symlink/tas5719.pdf

Technical Resource

3D Model	TFT Panel Used	Display Type	Luminance Rating	Optimal Viewing Angle	Touch Panel
NHD-10.1-1024600AF-ASXV#	**NHD-10.1-1024600AF-ASXV#**	Premium MVA	800 cd/m²	75° all angles	No Touch

EDID Array

```
const unsigned char NHD_HDMI10.1A[] = {
0x00, 0xFF, 0xFF, 0xFF, 0xFF, 0xFF, 0xFF, 0x00, 0x39, 0x04, 0x03, 0x00, 0x00, 0x00, 0x00, 0x00,
0x01, 0x1B, 0x01, 0x03, 0xA1, 0x16, 0x0D, 0x78, 0x02, 0xBB, 0xD0, 0x94, 0x57, 0x55, 0x91, 0x27,
0x21, 0x50, 0x54, 0x00, 0x00, 0x00, 0x01, 0x00, 0x01, 0x01, 0x01, 0x01, 0x01, 0x01, 0x01, 0x01,
0x01, 0x01, 0x01, 0x01, 0x01, 0x01, 0xB0, 0x13, 0x00, 0x40, 0x41, 0x58, 0x19, 0x20, 0x30, 0x20,
0x3A, 0x00, 0xDF, 0x7D, 0x00, 0x00, 0x00, 0x18, 0x01, 0x1D, 0x00, 0x72, 0x51, 0xD0, 0x1E, 0x20,
0x6E, 0x28, 0x55, 0x00, 0xDF, 0x7D, 0x00, 0x00, 0x00, 0x18, 0x00, 0x00, 0x00, 0xFC, 0x00, 0x4E,
0x48, 0x44, 0x2D, 0x31, 0x30, 0x2E, 0x31, 0x20, 0x4C, 0x56, 0x44, 0x53, 0x00, 0x00, 0x00, 0xFD,
0x00, 0x00, 0x3C, 0x00, 0x2D, 0x08, 0x00, 0x00, 0x00, 0x00, 0x00, 0x00, 0x00, 0x00, 0x01, 0x65,
0x02, 0x03, 0x10, 0x60, 0x63, 0x03, 0x0C, 0x00, 0x83, 0x01, 0x00, 0x00, 0x23, 0x09, 0x04, 0x04,
0x00, 0x00, 0x00, 0x00, 0x00, 0x00, 0x00, 0x00, 0x00, 0x00, 0x00, 0x00, 0x00, 0x00, 0x00, 0x00,
0x00, 0x00, 0x00, 0x00, 0x00, 0x00, 0x00, 0x00, 0x00, 0x00, 0x00, 0x00, 0x00, 0x00, 0x00, 0x00,
0x00, 0x00, 0x00, 0x00, 0x00, 0x00, 0x00, 0x00, 0x00, 0x00, 0x00, 0x00, 0x00, 0x00, 0x00, 0x00,
0x00, 0x00, 0x00, 0x00, 0x00, 0x00, 0x00, 0x00, 0x00, 0x00, 0x00, 0x00, 0x00, 0x00, 0x00, 0x00,
0x00, 0x00, 0x00, 0x00, 0x00, 0x00, 0x00, 0x00, 0x00, 0x00, 0x00, 0x00, 0x00, 0x00, 0x00, 0x00,
0x00, 0x00, 0x00, 0x00, 0x00, 0x00, 0x00, 0x00, 0x00, 0x00, 0x00, 0x00, 0x00, 0x00, 0x00, 0x00,
0x00, 0x00, 0x00, 0x00, 0x00, 0x00, 0x00, 0x00, 0x00, 0x00, 0x00, 0x00, 0x00, 0x00, 0x00, 0x61
};
```

EDID Timing

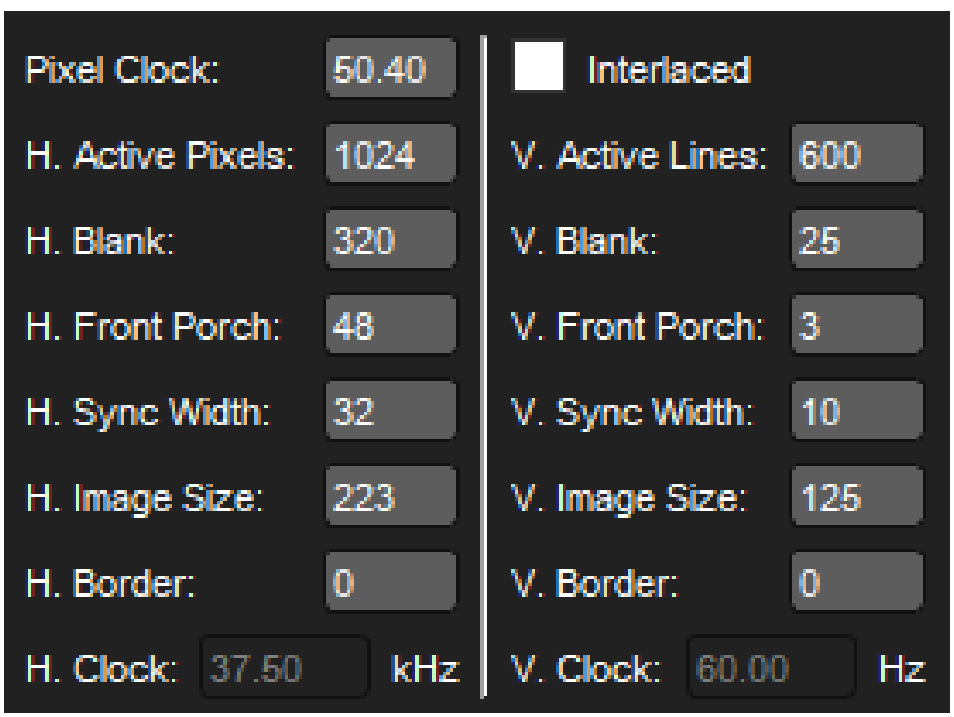

Quality Information

Test Item	Content of Test	Test Condition	Note
High Temperature storage	Endurance test applying the high storage temperature for a long time.	+60°C, 240 hrs.	2
Low Temperature storage	Endurance test applying the low storage temperature for a long time.	-20°C, 240 hrs.	1,2
High Temperature Operation	Endurance test applying the electric stress (voltage & current) and the high thermal stress for a long time.	+50°C, 120 hrs.	2
Low Temperature Operation	Endurance test applying the electric stress (voltage & current) and the low thermal stress for a long time.	0°C, 120 hrs.	1,2
High Temperature / Humidity Operation	Endurance test applying the electric stress (voltage & current) and the high thermal with high humidity stress for a long time.	+50°C, 90% RH, 120 hrs.	1,2
Thermal Shock resistance	Endurance test applying the electric stress (voltage & current) during a cycle of low and high thermal stress.	-20°C, 30min->25°C, 5min -> 70°C, 30min = 1 Cycle 10 cycles	
Vibration test	Endurance test applying vibration to simulate transportation and use.	10-55Hz, 15mm amplitude. 60 sec in each of 3 directions X,Y,Z For 15 minutes	3
Static electricity test	Endurance test applying electric static discharge.	Air: V_S=±8KV, Contact: V_S=±4KV 10 Times	

Note 1: No condensation to be observed.
Note 2: Conducted after 4 hours of storage at 25°C, 0%RH.
Note 3: Test performed on product itself, not inside a container.