April 29, 2026

Product Transition Guide

Old PN: NHD-C160100AZ-RN-GBW | New PN: NHD-C160100AZ-RN-GBW_Rev1A

The ST7528i controller IC used in this display has been discontinued by the IC manufacturer. The controller IC on the new version of the LCD has been upgraded to ST75160i. The new IC's instruction set and initialization sequence are different than the previous IC. Details of the changes are described below.

The new LCD version adds support for 8-bit 6800 Parallel, 3-wire SPI, 4-wire SPI, and I^2C interface modes which are selectable by using the interface select signals on pins 1-3. Pull-up and pull-down resistors have been added on the FPC to set 8-bit 8080 Parallel as the default interface mode to match the previous version of the display. When using this interface mode, pins 1-3 can be treated as no-connect pins.

The new version of the display does not require external capacitors to be added by the user. Capacitors have been added to the FPC as a design improvement. Details of the pinout change are described below.

The purpose of this document is to highlight and explain the key differences that need to be accounted for when transitioning to the new version of the display.

Design Improvements

- Controller IC upgraded to ST75160i
  - New IC supports additional commands and has better long-term availability
- Additional interface support
  - New LCD version adds support for 8-bit 6800 Parallel, 3-wire SPI, 4-wire SPI, and I^2C interface
- User does not need to add capacitors externally
  - Capacitors added to FPC to reduce I/Os needed by the user

2661 Galvin Ct.
Elgin, IL 60124
Ph: 847.844.8795
Fx: 847.844.8796

Display Models

	NHD-C160100AZ-RN-GBW	NHD-C160100AZ-RN-GBW_Rev1A
Display Type	STN(+)	STN(+)
Display Mode	Reflective	Reflective
Resolution	160 x 100	160 x 100
Outer Dimensions	41.5 x 36.0 x 2.1 mm	41.5 x 36.0 x 2.1 mm
Active Area	34.385 x 21.485mm	34.385 x 21.485mm
FPC Size & Shape	See below	See below
Pinout	See below	See below
Driver IC	ST7528i	ST75160i
Software Timing	See datasheet	See datasheet
Interface	8-bit 8080 Parallel	8-bit 8080 Parallel (default) 8-bit 6800 Parallel 3-wire SPI 4-wire SPI I^2C
LCD Voltage	2.7V – 3.3V	2.7V - 3.3V
Optimal View	6:00	6:00

Pinout Comparison

	NHD-C160100AZ-RN-GBW	NHD-C160100AZ-RN-GBW_Rev1A	
Pin #	**Signal**	**Signal**	
1	CSB	IF0	(internal pull-up resistor)
2	RST	IF1	(internal pull-up resistor)
3	A0	IF2	(internal pull-down resistor)
4	/WR	NC	
5	/RD	NC	
6	DB0	V_{SS}	
7	DB1	V_{DD}	
8	DB2	DB7	
9	DB3	DB6	
10	DB4	DB5	
11	DB5	DB4	
12	DB6	DB3	
13	DB7	DB2	
14	V_{DD}	DB1	
15	V_{SS}	DB0	
16	V_{OUT}	/RD	
17	V_4	/WR	
18	V_3	A0	
19	V_2	RSTB	
20	V_1	CSB	

Mechanical Comparison

NHD-C160100AZ-RN-GBW

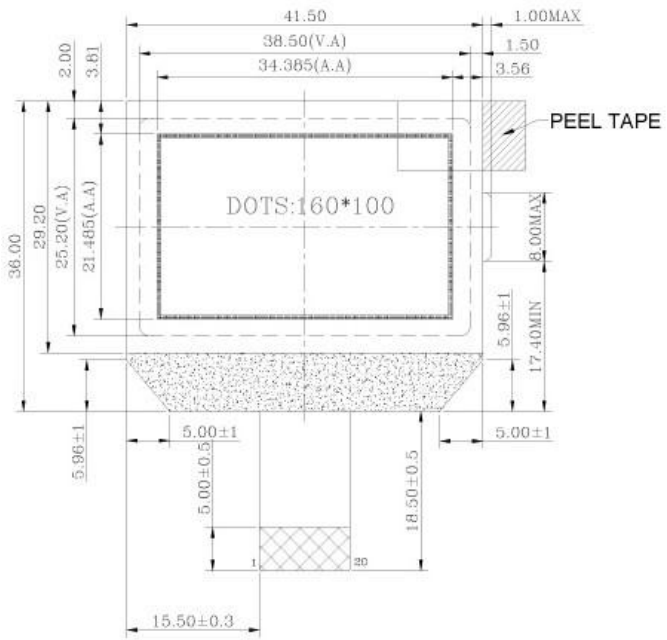

NHD-C160100AZ-RN-GBW_Rev1A

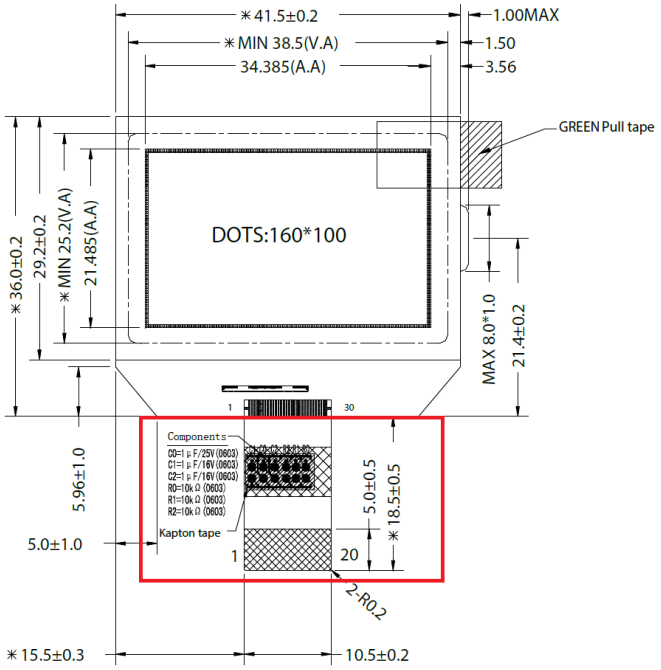

Hardware

- Wiring Diagram

NHD-C160100AZ-RN-GBW

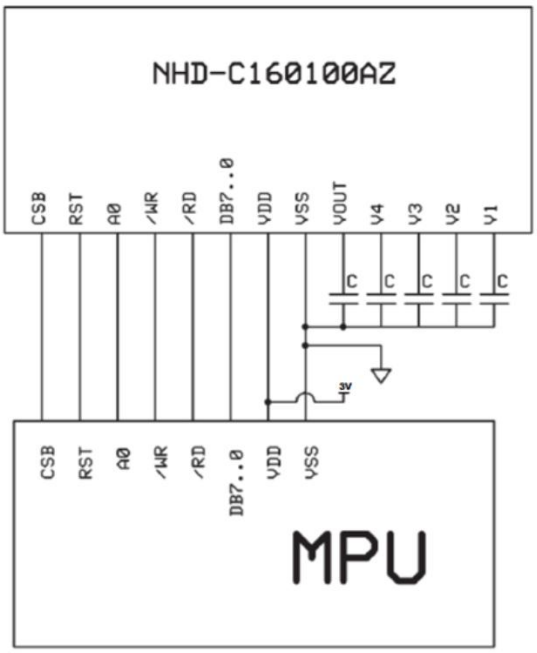

NHD-C160100AZ-RN-GBW_Rev1A

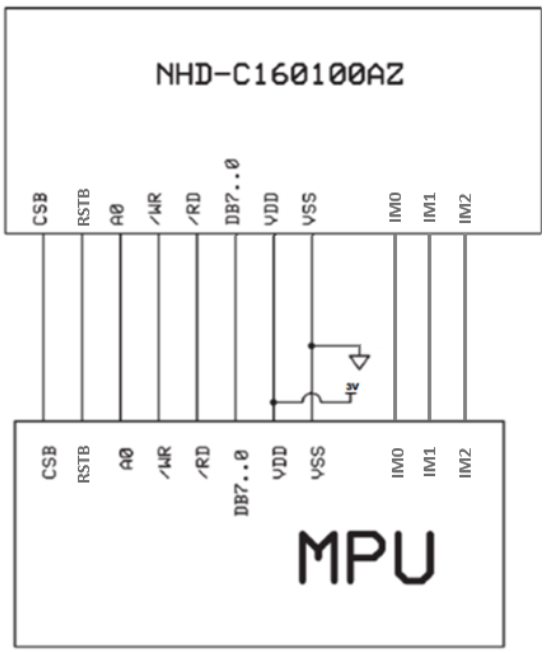

Software

- Initialization
  - Please refer to the initialization section of the example code for this display
- Instruction Table
  - Please refer to the instruction table on page 55 of the ST75160i datasheet

For additional support on transitioning to our new COG LCD, or questions about other products, please contact us through any of our technical support channels listed below:

Email: nhtech@newhavendisplay.com

Online Support Center: Contact an Engineer

Forum: Community Forum

Phone: (847) 844-8795